Arduino Tutorial 1 – Blinking LEDs

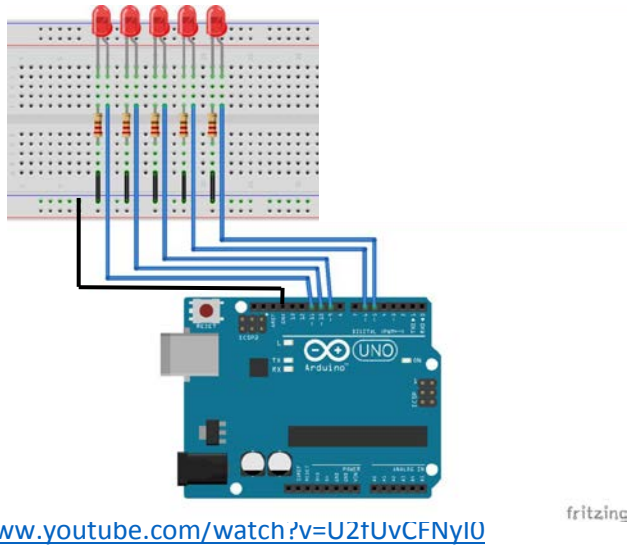

Objectives:

- Learn basic structure and syntax of Arduino C.
- Use variables and program flow control structures
- Learn an application of LEDs.

Materials

- Arduino Uno microcomputer and USB cable
- 5 LEDs
- 5 resistors, ~220 Ω
- Solderless breadboard
- Jumper wires

Watch the MIT K12 video "Arduino Tutorial 1" video at https://www.youtube.com/watch?v=U2fUvCFNyI0

- watch to 4:30 when hardware is complete.

Build the hardware

- Follow video or see sample. Use pins 8 – 12.
- Note: Use a resistor between the short leg of each LED and - bus (not done in video)

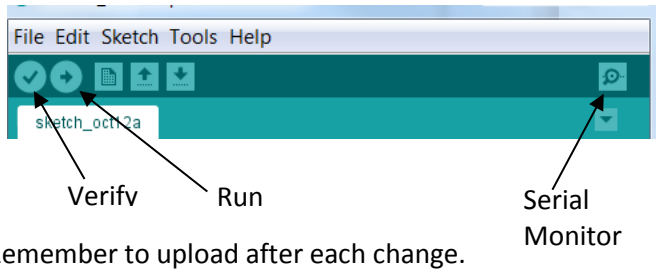

Code and connect to Arduino

1. Connect the Arduino to the computer
2. Set Board and Ports under Tools dropdown menu
3. Type in this code, and get it to compile (verify).
4. Notice how some words show up in different colors.
5. Run the code and observe the behavior of the LEDs. Remember to upload after each change.

STEP 1

```
// BlinkRowDB
// this code is starter code for controlling LEDs

void setup()
   {
   // initialize the digital pin as an output
   pinMode(12, OUTPUT);

   }  // end of setup()

void loop()
   {
   digitalWrite(12, HIGH);  // set the LED on
   delay(1000);             // wait for a second
   digitalWrite(12, LOW);   // set the LED off
   delay(1000);             // wait for a second

   }  // end of loop()
```

Watch the rest of the MIT K12 video "Arduino Tutorial 1" video at

- watch to end at 7:09 to see what the code will look like

STEP 2
Add code for more LEDs

Add the following code in setup()

```
pinMode(11,OUTPUT);
pinMode(10,OUTPUT);
pinMode(9,OUTPUT);
pinMode(8,OUTPUT);
```

Add the following code in loop()

```
digitalWrite(11, HIGH);  // set the LED on
delay(1000);             // wait for a second
digitalWrite(11, LOW);   // set the LED off
delay(1000);             // wait for a second
```

repeat for each LED 10 - 8

Run the code and modify

1. Debug as needed
2. Modify the delay statements
3. Reorder the statements to turn on several LEDs at once

STEP 3
Defining and use Variables

1. Define a variable near the top of the code to define the delay times by inserting these lines before the void setup() line.

```
int delayOn = 1000;   //time LED is On
int delayOff = 500;   // time LED is Off

void setup()
{ etc.
```

2. Next change the loop() code to use the variables like this:

```
void loop()
{
   digitalWrite(11, HIGH);  // set the LED on
   delay(delayOn);               // wait for a second
   digitalWrite(11, LOW);   // set the LED off
   delay(delayOff);              // wait for a second

   etc.
```

3. Play around with the code – reordering and/or modifying variable. Remember to compile and upload after each change.